Code24

Fingerprint Waterproof Access control /Card Reader

User Manual (V1.0)

The first: access control machine mode

1.Specifications:

1.1 Technical parameters：

Item	Value		Item	Value
Operating voltage	DC 12V±10%		Ambient temperature	-20℃—70℃
Operating current	< 100mA		Storage	fingerprint（100）card（1000）
Dimensions	124×74×20mm		Card type	EM(ID) or MF1（IC）card
Weight	320g		Card reading distance	1—10CM

1.2 Factory Default：

Programming Password	123456	**Common Access Password**	None
Backlight	Auto (for options)	**Relay Unlock output**	5 Seconds
W26 port	Input (for options)	**Security mode**	OFF

2.Installations Guide:

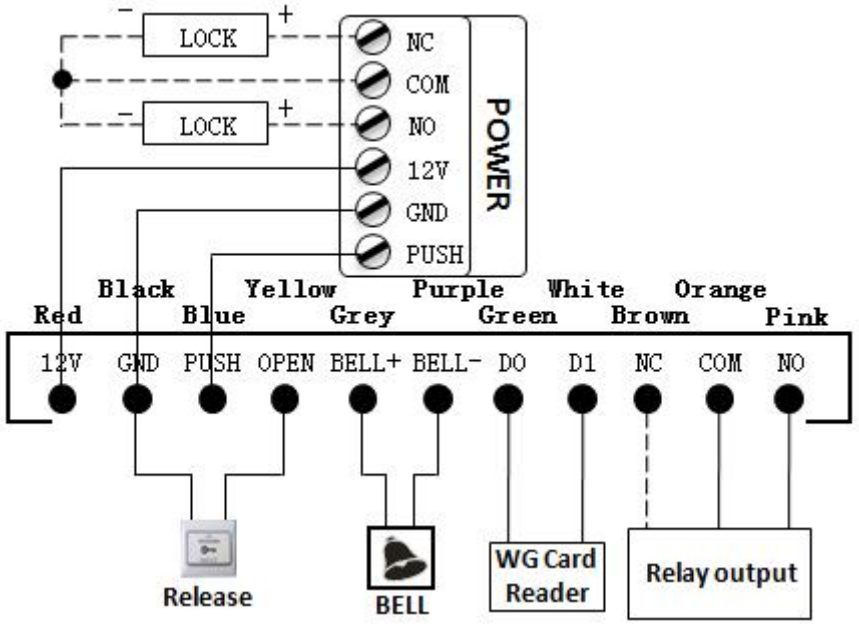

3. Programming Guide

3.1 Programming Guide: (Programming Password Default: 123456)

Programming Item		Press key and swipe card operations	Remark
Basic Function	Change Programming Password (Pro.PW)	# Pro.PW # 0 new Pro.PW # new Pro.PW #	If Pro.PW lost, perform 3.2 to reset to Factory Default (123456)
	Add user card	# Pro.PW # 1 swipe cards #	If add series cards, swipe cards continuously
	Add the fingerprint	# Pro.PW # 20 4-digit User ID Press your finger once Press your finger twice Press your finger Three #	**The user number range of the fingerprint entered here is 0001-0199**. You must press the fingerprint within 5 seconds after entering the user number
	Configure Common PIN	# Pro.PW # 21 new Common PIN #	Common PIN is only one
	Delete all users	# Pro.PW # 40 0000 #	Delete all cards and PIN except Common PIN
	Delete user by swiping card	# Pro.PW # 41 Swipe card or Press your finger #	If delete series cards, swipe cards continuously
Expand Function	Add user by input User ID	# Pro.PW # 22 4-digit User ID swipe cards #	Add card or password by user number. **The user number range here is 0200-9999**
	Add a personal door opening password	# Pro.PW # 23 4-digit User ID new password #	
	Delete user by User ID	# Pro.PW # 42 4-digit User ID #	Delete a card, password, or fingerprint by user number
	Delete user by card No.	# Pro.PW # 43 card number #	Card No. is 10-digit or 8- digit, device auto-identify
	Configure Unlocking Duration	# Pro.PW # 5 ×× #	XX is 2-digit (00~99). If XX is 00, Unlocking Duration is 0.2s
	Configure Authentication Mode	# Pro.PW # 6 ×× #	XX can be 00(card + fingerprint)/ 01(only Card)/02(Card or PIN)/03(Card & PIN)
	Card reader setting	# Pro.PW # 6 04 #	The machine can be used for card reader
	Backlight setting	# Pro.PW # 8 ×× #	XX can be 01/02/03 (Normal ON / Normal OFF / Auto)
	Reset Factory Default	# Pro.PW # 8 99 #	Except Programming Password and Manager Card

3.2 How to reset to Factory Programming Password (123456)

Step1：Turn off power and connect OPEN and GND terminal. Turn on power then there is 3 long beeps with green and red light flashing alternately.

Step2：Turn off power, disconnect OPEN and GND terminal. Turn on power again. Initializing Programming Password is completed.

3.3 Use ID explanation

The user number in the machine is divided into two segments, from 0001 to 0199, for fingerprint users only, and from 0200 to 9999 for card or password users. When the card is automatically added, the card user does not take up the user number.

4. Other extensions

4.1 How to change PIN

Swipe card or press PIN to unlock within 5s press [#] for3suntil the green light flash fast, then press [new PIN#new PIN#], the new PIN changed successfully with a long beep.

4.2 Authentication Mode for “Card+ PIN “function

Setp1：When Authentication Mode is [Card or PIN] (factory default), according to the step 3.4 to configure the PIN of the card.

Setp2：Press [#Programming Password#603#] to configure Authentication Mode to be [Card & PIN].

Setp3：Swipe user’s card with green light fast flash then input [PIN#]with green light normally ON, the door opened successfully.

4.3"Card + fingerprint" pattern door opening function

Setp1：After the user opens the door successfully by swiping a card, press the "#" key (about 3 seconds) until the green light flashes quickly, and then press the valid fingerprint (long click) to bind the fingerprint successfully;

Setp2：Execute # programming password # 600 # to set the access control machine to "card + fingerprint" opening mode;

Setp3：Brush user card, the machine green light flash, then press fingerprint, the machine green light is always on, open the door successfully.

4.3 Door open function description:

When the credit card or password is normally opened, press the 7, 9 digit key to keep the door open. When the door is always open, only once the credit card, password, or the door button is opened again, the exit is always open.

Part TWO: Card Reader Mode

1.Steps to set up a fingerprint reader

Step 1：Switch the access control machine to a card reader

Press # Pro.PW # 604 #,The red light of the machine is always on, and the access control machine switches to the card reader mode

(Note: After the access control machine switches to the card reader mode, all the data in the original access control machine will be emptied!)

Step 2：Bind the fingerprint (this step can be done by the user)

Swipe the user's card on the access control machine for 5 times in a row, and the machine makes a long sound (at the same time, the green light flashes quickly). Then press the fingerprint that needs to be bound for 3 times repeatedly, and the machine makes a long sound, indicating that the fingerprint is bound to the card successfully. Press the bound fingerprint and the fingerprint module will turn green.

Step 3： No matter swipe card, or press fingerprint, WG signal output sensor card number.

2. Delete the fingerprint

Method 1： The user's card is continuously placed in the card reading area for about 10 seconds, and the machine makes 2 long noises. The fingerprint bound with the card is deleted successfully

Method 2：Long press # key for 3 seconds Pro.PW # 41 press fingerprint # the fingerprint is deleted successfully

Method 3：Long press # key for 3 seconds Pro.PW # 43 card number # bound to the card fingerprint delete successfully

3. Other commands in card reader mode:

WG26 output: long press # key for 3 seconds (flash green light) Pro.PW # 826 #

WG34 output: long press # key for 3 seconds (flash green light) Pro.PW # 834 #

Switch to access control machine: long press # key for 3 seconds (green light flash) Pro.PW # 604 #

Change programming password(Pro.PW): long press # key for 3 seconds (flash green light) Pro.PW # 0 new Pro.PW # repeat new Pro.PW # 0

Card reader mode: press fingerprint successfully, ring 1 sound