Code49

Metal Access Controller

User Manual V1.0

1. Specifications:

1.1Technical parameters：

NO	Item	Value
1	Operating voltage	AC/DC 12-24V
2	Operating current	< 100mA
4	Weight	About 300 g
5	Ambient temperature	-20℃—70℃
6	Relative humidity	20%—80%
7	Storage	10000 users
8	Card type (alternative)	ID+IC dual band
9	Card reading distance	1－10CM

1.2 Factory Default：

Programming Password	123456	**Common Access Password**	None
Backlight	Auto (for options)	**Relay Unlock output**	5 Seconds
Open mode	Card or Access Password Access Password include Private Access Password (PIN) and Common Access Password		

1.3 Light and Sound indicates:

Light: red and green

Light Description	Access control status
Red light flash every 1 sec （Slow flash）	Holding state
Red light is always ON	Programming state
Green light is always ON within Open time	Unlocking state
Green light flash every 0.5sec (Fast flash)	Pending further action

Sound：buzz

Description	Indicates
1 short buzz	Valid input
3 short buzz	Invalid input
1 long buzz	Program success
Continuous long buzz	Restoring factory programming passwords

2. Installations Guide:

NO	Mark	Color	Function
1	AC	Red	AC/DC 12-24V
2	AC	Black	
3	GND	Purple	Power-
4	PUSH	Blue	Low level output
5	OPEN	Yellow	Door Release
6	BELL	Grey	BELL
7	BELL	Grey	BELL
8	D0	Green	WG DATA0
9	D1	White	WG DATA1
10	NC	Brown	Relay NC output
11	COM	Orange	Relay Com output
12	NO	Pink	Relay NO output

Wiring diagram:

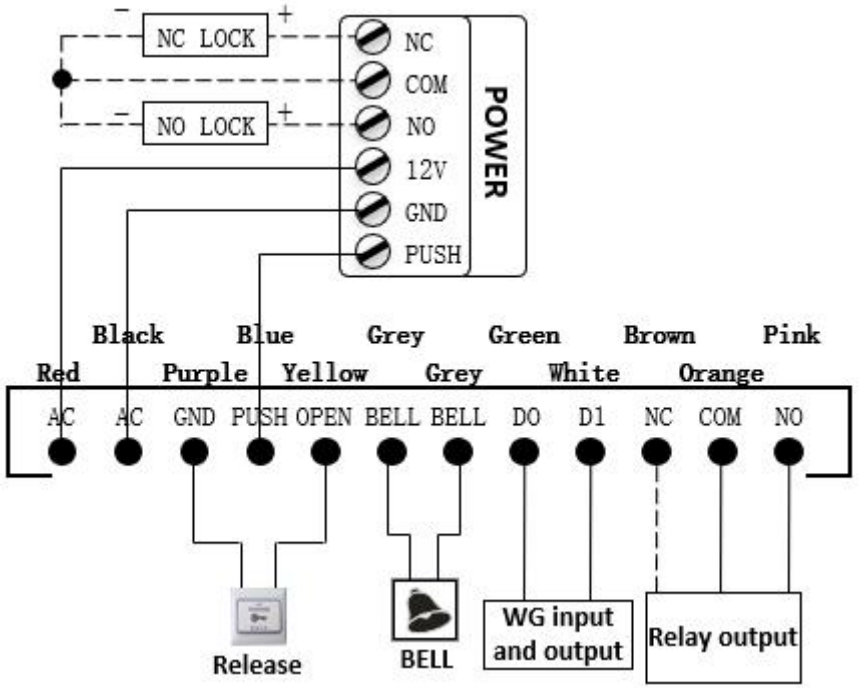

Remark:

If let relay drive electric-lock, please connect a reverse diode with the

3.Programming Guide

3.1 Programming Guide: (Programming Password Default: 123456)

Remark: All password can be 3~6 digits

Programming Item		Press key and swipe card operations	Remark
Basic Function	Add user card	# Pro.PW # 1 swipe cards #	If add series cards, swipe cards continuously
	Configure Common PIN	# Pro.PW # 21 new Common PIN #	Common PIN is only one, Unlocking method : Enter Common PIN then press [#]
	Delete all users	# Pro.PW # 40 0000 #	Delete all cards and PIN except Common PIN
	Delete user by swiping card	# Pro.PW # 41 swipe cards #	If delete series cards, swipe cards continuously
	Change Programming Password (Pro.PW)	# Pro.PW # 0 new Pro.PW # new Pro.PW #	If Pro.PW lost, perform 3.2 to reset to Factory Default (123456)
Expand Function	Add user by input User ID	# Pro.PW # 22 4-digit User ID swipe card #	Add user card or personal door opening password according to the number specified by the user. The user number must be 4 digits and unique. Personal Password User + User ID A user can add a maximum of 50 groups
	Add PIN	# Pro.PW # 23 4-digit User ID new PIN #	
	Delete user by User ID	# Pro.PW # 42 4-digit User ID #	The user number is 4 digits, as described in Section 3.3
	Delete user by card No.	# Pro.PW # 43 card No. #	Card No. is 10-digit or 8- digit, device auto-identify
	Configure Unlocking Duration	# Pro.PW # 5 XX #	XX is 2-digit (00~99). If XX is 00, Unlocking Duration is 0.2s
	Configure Authentication Mode	# Pro.PW # 6 XX #	XX can be 01(only Card)/02(Card or PIN)/03(Card & PIN)
	Card Reader mode	# Pro.PW # 6 XX #	XX can be 04(WG26 Output)/05(WG34 Output)
	Automatic card adding mode	# Pro.PW # 7 XX #	XX can be 05(Enter automatic card mode)/06(Exit automatic card mode)
	Backlight setting	# Pro.PW # 8 XX #	XX can be 01/02/03 (Normal ON / Normal OFF / Auto)
	Reset Factory Default	# Pro.PW # 8 99 #	Except Programming Password and Manager Card

3.2 Initialize the programming password (123456) and add the management card

Step 1: Power off, short-connect the OPEN line and GND line, power on again, and the traffic light flashes alternately after three long sounds

Step 2: Swipe two blank cards in a row, the first one is "add card", the second one is "delete card" (if no management card is required, this step can be omitted)

Step 3: Power off, disconnect the connection between OPEN and GND, and then power on again, the programming password initialization is complete

3.3 Use ID explanation

User ID is 4-digit number from0001 to 9999. There is no User ID for the users added by command [1]. Perform command [40] to clear all User ID.

4. Other extensions

4.1 How to change PIN

Swipe card or press PIN to unlock within 5s press [#] for3suntil the green light flash fast, then press [new PIN#new PIN#], the new PIN changed successfully with a long beep.

4.2 Authentication Mode for Card& PIN function

Setp1: When Authentication Mode is [Card or PIN] (factory default), according to the step 4.1 to configure the PIN of the card.

Setp2: Press [#Programming Password#603#] to configureAuthentication Mode to be [Card & PIN].

Setp3: Swipe user's card with green light fast flash then input [PIN#]with green light normally ON, the door opened successfully.

4.3 Door open function description:

When the credit card or password is normally opened, press the 7, 9 digit key to keep the door open. When the door is always open, only once the credit card, password, or the door button is opened again, the exit is always open.

