Code61

Display screen access control

User Manual V1.0

1、Main technical parameters of the product

NO	Item	Value
1	Operating voltage	AC/DC 12-24V
2	Operating current	< 100mA
3	Ambient temperature	-20℃—70℃
4	Relative humidity	20%—80%
5	Storage	Card:1000, Fingerprint:100
6	Card type (alternative)	EM(ID)+MF1(IC) dual band
7	Card reading distance	1－8CM

2、Wiring Instructions

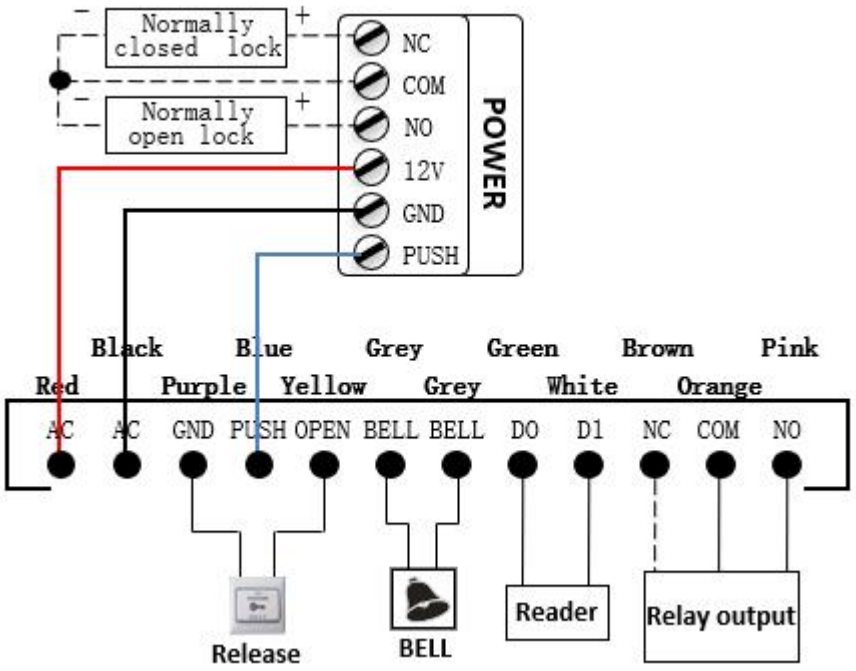

3、Operating instructions for display menu

Press the "#" key, enter the menu password (factory default is 123456), and then press the "#" key to confirm and enter the menu:

3.1. New users: Add a new fingerprint/card or password

3.2. Deleting a user: Delete users based on their user ID

3.3 Modify User: Modify the user based on the user ID

3.4 Time setting: Modify the time displayed on the machine.

3.5 System settings:

3.5.1.Door opening time: Set the relay action time（0~99s）

3.5.2.Public password: Set the public door unlock password

3.5.3. Menu Password: Modify the machine menu password

3.5.4.Delete All: Delete all users(Except for public passwords)

3.5.5 Multiple Authentication: Set combined unlocking methods

3.5.6. Automatic door closing: Set relay mode

3.5.7. Access Control Normally Open: Set to normally open mode

3.5.8.Backlight Setting: Set password keyboard backlight

3.5.9.Language selection: Set the machine display to Chinese or English

3.5.10.Factory Settings: Restore the machine to its factory default parameters

